# Computer Numerical Control (CNC) based Two-Dimensional Cutter

## Submitted by:

Soban Mujtaba (FA18-BEE-011/ATK)
Temoor Hussain Shah (FA18-BEE-017/ATK)
Zia Masood (FA18-BEE-019/ATK)

**Program: BS Electrical Engineering**

## Supervised by:

Dr. Atta Ur Rehman

A THESIS SUBMITTED IN PARTIAL FULFILLMENT OF THE REQUIREMENTS FOR THE DEGREE OF BACHELORS IN ELECTRICAL ENGINEERING

**Department of Electrical and Computer Engineering**
**COMSATS University Islamabad, Attock Campus, Pakistan.**

| PROJECT ID | ATK/FYP/EE/FA18-01 | NUMBER OF MEMBERS | 3 |
|---|---|---|---|

| TITLE | Computer Numerical Control (CNC) based Two-Dimensional Cutter |
|---|---|

| SUPERVISOR NAME | | Dr. Atta ur Rehman |
|---|---|---|

| MEMBER NAME | REG. NO. | EMAIL ADDRESS |
|---|---|---|
| Soban Mujtaba | FA18-BEE-011/ATK | Fa18-bee-011@cuiatk.edu.pk |
| Temoor Hussain Shah | FA18-BEE-017/ATK | Fa18-bee-017@cuiatk.edu.pk |
| Zia Masood | FA18-BEE-019/ATK | Fa18-bee-019@cuiatk.edu.pk |

**CHECKLIST:**

| | |
|---|---|
| Number of pages in this report | |
| I/We have enclosed the soft-copy of this document along-with the codes and scripts created by myself/ourselves | **YES / NO** |
| My/Our supervisor has attested the attached document | **YES / NO** |
| **I/We confirm to state that this project is free from any type of plagiarism and misuse of copyrighted material** | **YES / NO** |

| *MEMBERS' SIGNATURES* |
|---|
| |
| |

| Supervisor's Signature |
|---|
| |

**This work, entitled "Computer Numerical Control (CNC) based Two-Dimensional Cutter" has been approved for the award of**

## Bachelor of Science in Electrical Engineering

**July 2022**

## External Examiner:

## Head of Department:

Department of Electrical & Computer Engineering

COMSATS University Islamabad

ATTOCK – Campus

# Declaration

*"No portion of the work referred to in the dissertation has been submitted in support of an application for another degree or qualification of this or any other university/institute or other institution of learning".*

**SIGNATURES**

# Acknowledgements

All hails to Almighty, He guided us to the precised path and fulfilled our hopes while we were going through ups and downs in this Project. As He is the One who blessed us with such abilities and power of doing the doable. May He keep his blessings and mercies on us as always. Can't thank Him enough but to give what He wants from us and that is being 'Patient and Thankful'. And after that, special thanks of gratitude to Dr. Atta Ur Rehman who gave us the golden opportunity to do this wonderful project on under his supervision. We are grateful to him and glorify his cooperative nature for raising our confidence and doing his finest to make us do foremost. His will, motivation and efforts were right up there which helped us to go through all the difficulties with so much ease. His ability to provoke us to work with full efficiency was pre-eminent which certainly optimized and stimulated our working capacity. We are grateful to our family for always being there for us and supporting us at the time we needed the most. We would like to thank all our friends for every step they took for affording help to us.

**Soban Mujtaba (FA18-BEE-011/ATK)**
**Temoor Hussain Shah (FA18-BEE-017/ATK)**
**Zia Masood (FA18-BEE-019/ATK)**

# Abstract

In a highly competitive situation manufacturing high quality products with time saving and cost saving in the production process is a basic need of industry operators. Therefore, it is necessary to employ a computer system to assist in manufacturing.

We will be designing a Computer Numerical Control machine. Computer Numerical Control machines are used as plotters for drawing and for engraving. CNC machines saves time. Challenging aspects are Mechanical system design, Electronic system and wiring, and Computer and software. Electronics parts are integrated on mechanical framework. A microprocessor commands the electronics parts which then operate the mechanical structure on work-bed. Tested and calibrated Computer Numerical Control machine will provide proposed output

# Contents

**1.1 Motivation**.....2

**1.2 Introduction**.....2

1.2.1 Proposed system.....2

**1.3 Problem statement**.....4

1.3.1 Solution to the Problem .....5

**1.4 Project Objectives**.....6

**1.5 Project Research Questions**.....7

**1.6 Project Applications for the Betterment of the Society**.....7

**1.7 UN's Sustainable Development Goals of the Project**.....7

**1.8 Project Timeline** .....8

**1.9 Thesis Overview**.....9

**2.1 Computer Integrated Manufacturing**.....11

**2.2 3 Axis CNC Machine** .....11

**2.3 The most famous CNC machine**.....11

**2.4 Computer Aided Design (CAD)**.....12

**2.5 Computer Aided Manufacturing (CAM)** .....13

**3.1 System Architecture**.....17

**3.2 Computer and software tools**.....18

3.2.1 Arduino IDE .....18

3.2.2 GRBL Firmware .....18

3.2.3 CAD/CAM software: ..... 18

3.2.4 Gateway ..... 19

**3.3 Electrical system and wiring ..... 19**

3.3.1 Arduino Uno ..... 19

3.3.2 Driver circuit ..... 20

3.3.3 Circuit and Wiring ..... 20

3.3.4 Driving circuit ..... 21

**3.4 Mechanical system design ..... 21**

**4.1 Hardware tools ..... 24**

4.1.1 A4988 stepper motor Driver ..... 24

4.1.2 A4988 Stepper Driver Pinout ..... 25

4.1.3 CNC Shield V3 ..... 27

4.1.4 NEMA 17 stepper motors ..... 28

**5.1 The Hardware ..... 31**

5.1.1 The Structure ..... 31

5.1.2 X and Y axes ..... 32

5.1.3 The spindle assembly and Motor ..... 32

5.1.4 Z-axis ..... 32

**5.2 Results ..... 33**

5.2.1 Mathematical Calculations ..... 33

5.2.2 CAD/CAM Results ..... 34

5.2.3 G-Code for ‘COMSATS’ in quick engrave mode ..... 35

5.2.4 Arduino Code for 15x15 mm square ..... 36

5.2.5 Output Workpiece ..... 37

5.2.6 CNC Machine ..... 38

**6.1 Conclusions ..... 41**

**6.2 Limitations.....41**

**6.3 Future Recommendations.....42**

**6.4 Bibliography.....43**

# List of Tables

Table 1: Timeline of the project.....8

Table 2: Literature Review & Related Work.....13

Table 3: Specifications of Mechanical structure.....21

Table 4: Stepper Motor Resolution truth table .....26

# List of Figures

Figure 1: Proposed system/ Block Diagram .....3
Figure 2: CAD model of a CNC Machine .....3
Figure 3: Drilling bit of CNC machine.....3
Figure 4: Proposed architecture.....17
Figure 5: Generalized form of proposed architecture.....17
Figure 6: GRBL Controller 3.6.1 User Interface.....19
Figure 7: Arduino UNO R3 Board .....20
Figure 8: Electrical Circuit .....20
Figure 9: Model of mechanical framework .....22
Figure 10: A4988 stepper motor module with heat sink .....24
Figure 11: A4988 Driver module Pinout.....25
Figure 12: A4988 connections.....26
Figure 13: CNC Shield V3 mounted on Arduino UNO.....27
Figure 14: NEMA 17 stepper motor Figure 15: NEMA 17 stepper motor phases.....28
Figure 16: Mechanical Structure model with three stepper motors for 3D movement and a spindle motor for drilling bit.....31
Figure 17: X and Y axis supports for stepper motors along with rod rails.....32
Figure 18: spindle motor assembly.....32
Figure 19: Z axis support and moving rod rail .....33
Figure 20: Computer aided design of a simple square shape .....34
Figure 21: GRBL Controller interface with CNC machine and real time Observations .....34
Figure 22: First result for making an Arc .....37
Figure 23: Engraving results of China Wood (linear motion in XY plane) without G-Code using C++ coding and using loops Note: number of loops required for desired length is calculated mathematically.....37
Figure 24: Alphabet ‘A’ written in engraving mode (G-Code) .....38
Figure 25: Word ‘COMSATS’ written in fast engraving mode (G-Code).....38
Figure 26: Final form of CNC machine.....38
Figure 27: Circuit with Arduino UNO and CNC shield mounted on it. A4988 motor driver, used for stepper motors.....39

# CHAPTER 1

Introduction

## 1.1 Motivation

Demand of every product is increasing day by day because of increase in world population. Industrial sectors have to expand their production capacity every year to meet the ever-increasing consumer demand. They have to make more products in less time with minimal waste products because of limited natural resources. So, need arises to automate the reshaping, cutting and engraving of materials. It can be the core process for some industries and for others it can be referred as conditioning process.

## 1.2 Introduction

Cutting is a very common and one of essential process in several industries. Traditionally skilled workers are required for cutting operations. Automation has replaced skilled workers in several processes in the industries. Computer numerical control (CNC) mechanism is vastly used in industry. CNC machine finds applications in several industries like Medical, Aerospace, Oil and Gas, Electronics etc. CNC are used for both prototyping and production
A complete CNC based system consists of

- The mechanical assembly
- The electrical circuit
- The software

We aim to build a Two-dimensional trajectory following machine for cutting applications
This is the basis to 3-D CNC engraver, CNC milling, CNC Lathe, 3-D printer etc.

### 1.2.1 Proposed system

This thesis describes computer numerical control machine that is able to move in two-dimensional plane. It automates the process of drawing, cutting, designing and engraving on paper, soft wood and acrylic. The final CNC machine is easy and safe to use as it is fully controlled by computer. The proposed system comprises of a microcontroller connected to a computer. Aspire is a software to design shapes and objects. After designing it creates the G-Code of that object. Another software called GRBL controller takes that G-Code as .NC file and feeds it to the controller. Controller then commands the stepper motors to move in two-dimensional plane. The spindle motor mounted on z-axis pulley has drilling bit which is used for cutting the processed material.

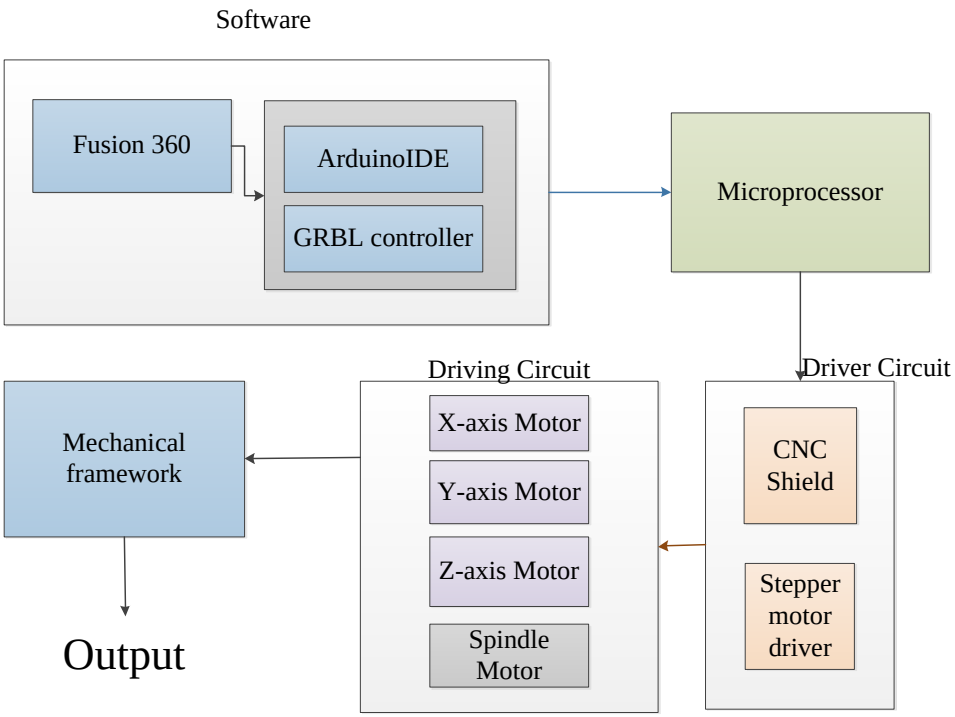


*Figure 1: Proposed system/ Block Diagram*

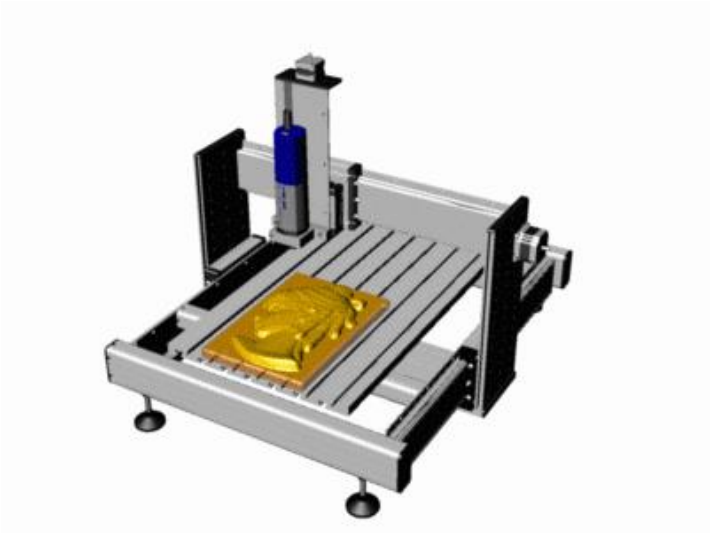

*Figure 2: CAD model of a CNC Machine*

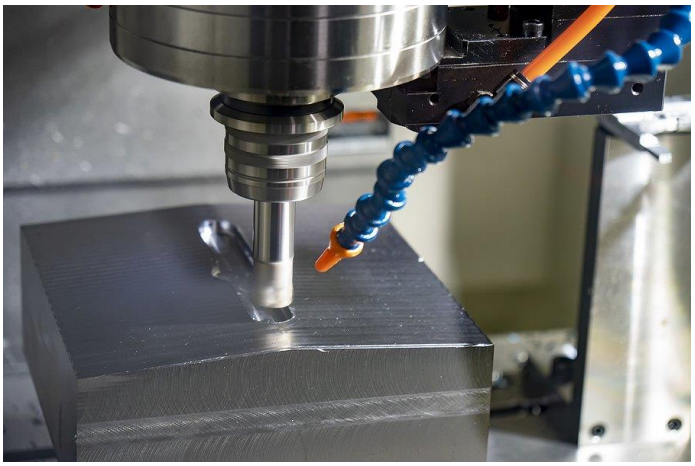

*Figure 3: Drilling bit of CNC machine*

## 1.3 Problem statement

Cutting of a variety of materials is a common requirement in majority industries. Machines have replaced humans in many industrial areas. Basic purpose of all the machines around us is to make our life easy. But conventional machining has limitations like

- Depends on human mind during runtime, human feel exhausted, have emotions and natural tendency towards errors
- Time consuming
- More wastage of raw material
- Does not start and stop automatically and does not know if the drilling in complete
- Requires manual operating

Therefore, a computer numerical control (CNC) machining system is required in which the cutting tool and the workpiece both are controlled with the help of numerical program.

### 1.3.1 Solution to the Problem

Therefore, the solution to the problem is the development of computer numerical control machine such that it is able to move on a two-dimensional work bed along with the ability of cutting and possibly plotting applications. Computerized Numerical Control (CNC) Machining is a method used to perform a wide range of manufacturing tasks like cutting, reshaping, designing and engraving.

Complete process of CNC machining comprises of Computer Aided Design (CAD) and Computer Aided Machining (CAM). CAD is done using software called **Aspire** and the resulting program is loaded to the brain (microcontroller) of CNC machine by another software called **GRBL controller.** While mechanical framework along with electrical circuitry serve the purpose of CAM. CNC machines replaced the old-school manual machines.

Our CNC machine, controlled by programming language will probably provide

- Greater accuracy
- Automated control
- Improved productivity
- Can work 24 hours a day
- Uniformity in design
- Safe to operate
- Possibly no human error
- Less time required
- Less human aid required

## 1.4 Project Objectives

The project's main objectives are given as follows:

- Designing A Computer Numerical Control based Cutter
- Enabling the machine to follow two-dimensional trajectory
- Developing a two-dimensional ink plotter
- Extending the idea to engraving and possibly dry etching of PCB board

## 1.5 Project Research Questions

The thesis addresses following questions

- How to interface GRBL controller with CNC machine?
- How computer aided manufacturing and computer aided designing is achieved through Aspire 10?
- Why the actuator type is stepper motor?

## 1.6 Project Applications for the Betterment of the Society

- Reduced physical manipulation
- Less dangerous to workers
- Easier operation
- Increased production capacity
- Time will be minimized
- Repeatability
- Scalability

## 1.7 UN's Sustainable Development Goals of the Project

The project meets the UN's sustainable development goals. The 9th Goal is defined as

- Inclusive and sustainable industrialization, together with innovation [9]
- Increase the access of small-scale industrial and other enterprises.[9]

Our project is to revolutionize the industrial sector by making it more automated. CNC machines are also basis to robotics and 3d printers as mentioned in introduction chapter.

and human safety that encompass urban planning and effective use of natural resources. Moreover, 11th Goal aims to improve the living standard of the cities and to build the infrastructure for facilitating the citizens.

## 1.8 Project Timeline

The project started right after the mid of October 2021 and it was supposed to be complete In June 2022. Table 1.1 shows the timeline of the project.

*Table 1: Timeline of the project*

| No. | STARTING WEEK DATE | DESCRIPTION OF MILESTONE | DURATION IN WEEK |
|---|---|---|---|
| 1 | 18-10-2021 | Proposal defense | 2 weeks |
| 2 | 01-11-2021 | Literature review | 2 weeks |
| 3 | 15-11-2021 | To understand the working of mechanical structure | 2 weeks |
| 4 | 29-11-2021 | To understand the working of electrical components | 2 weeks |
| 5 | 13-12-2021 | To understand the working of software | 2 weeks |
| 6 | 27-12-2021 | Implementation of One-dimensional cutter | 3 weeks |
| 7 | 17-01-2022 | Implementation of Two-dimensional trajectory following machine | 4 weeks |
| 8 | 14-02-2022 | Integration of cutter and plotter | 3 weeks |
| 9 | 07-03-2022 | Enabling Two-dimensional trajectory following machine to Two-dimensional ink plotter | 3 weeks |
| 10 | 28-03-2022 | Testing | 3 weeks |
| 11 | 18-04-2022 | Thesis writing | 4 weeks |
| 12 | 16-05-2022 | Thesis submission and Final Defense | 2 weeks |

## 1.9 Thesis Overview

Thesis describes

- The brief introduction to the project in chapter 1
- Literature review and the related work in chapter 2
- Research methodology with the full description of block diagrams, flow charts and algorithms in chapter 3
- Hardware components used in the project in chapter 4
- Results obtained in chapter 5
- Conclusions and discussions in last chapter

# CHAPTER 2

Literature review

## 2.1 Computer Integrated Manufacturing

Computer Integrated Manufacturing (CIM) involves computer numerical control or CNC using a CNC machine. There are different types of CNC machines in the market and the popular ones are 2-axis and 3-axis CNC machines. Major components of CNC machines are mechanical design, drive modules, and system software. Mechanical design is composed of system structure, drive modules consist of microprocessor, and the last part – system software used for milling a work-piece is controlled by G-code command and NC-code command. [1]

## 2.2 3 Axis CNC Machine

Mini CNC machine uses the same operating system as other CNC machines but the objective of the maker is to save cost in purchasing a large and expensive CNC machine with redundant mechanisms more than necessary for medium-sized and small-sized enterprises including moving and installation that requires a large place and specialists.

The design and development of 3-Axis CNC router machine with microcontroller can achieve a variety of complex workpieces with low cost. The machine supports cutting, reaming, marking, drilling, and milling for wood, acrylic, and PCB box. The microcontroller can facilitate design and image processing software such as ArtCam and InkScape that can convert the movement procedure of end mills in milling and reaming using G-code and GRBL software to control the operating system of the mini-CNC machine [1].

## 2.3 The most famous CNC machine

### CNC Milling

A CNC milling is a machine process that uses computerized controls and rotating multi-point cutting tools to progressively remove material from the workpiece or cut different materials such as metal, plastic, glass, and wood, and produce a custom designed part or product[2]

### CNC Lathes

CNC lathe is a CNC machine that used to cut workpieces as they are turned. CNC lathe can make exact cuts rapidly by utilizing different apparatuses. The result is a beautifully finished product [2].

### CNC Routers

A CNC router is very similar in concept to a CNC milling machine. It is a computer-controlled cutting machine related to the hand-held router used for cutting various hard materials, such as wood, composites, aluminium, steel, plastics, glass, and foams [2].

### CNC Plasma Cutters

A CNC plasma system is a machine that carries a plasma torch, and can move that torch in a path directed by a computer. The procedure of plasma cutting includes the cutting of a material utilizing a plasma burn [2].

### CNC Electric Discharge Machines

Electric discharge machining, or EDM for short, includes making a particular shape inside a specific material by utilizing electrical releases, or starts [2].

## 2.4 Computer Aided Design (CAD)

CNC machine collects data from programming that is derived from computer aided design (CAD) and computer aided manufacturing (CAM) [6].

CAD is a software tool used by engineers to create digital 2D and 3D drawings to design a variety of items. Computer models are created and defined by geometrical patterns. CAD allows designers to not only design but simulate the designs in real-world conditions. It can design anything from a simple square box to a complex building design.

## 2.5 Computer Aided Manufacturing (CAM)

CAM uses geometrical design data to control automated machinery. These systems are connected with CNC or direct numerical control (DNC) systems, in which both can mechanically encode geometric data into a program called G-Code or NC-Code. Combined CAD and CAM enable CNC machine to turn a digital into reality.

*Table 2: Literature Review & Related Work*

| **Reference No** | **Paper** | **Software** | **Findings** |
|---|---|---|---|
| 1 | Intarapadung, Anantakul. "Development of Mini CNC Machine Design and Building for Making Ceramic Cup and Bowl Prototype." *Pertanika Journal of Science & Technology* 29.3 (2021). | Arduino IDE, MACH 3 CNC Controller | G-code gives better accuracy and reduces the work load. Making a small machine brings a flexibility to do works. |
| 2 | Qasim, Sara Raad, Haider Mohammad, and Mustafa Falah. "Accurate and Cost-Effective Mini CNC Plotter." *International Journal of Computer Applications* 975: 8887. | Arduino IDE, Inkscape, G Code Sender | Draw any figure or image |
| 3 | Ambrizal, Nur Hidayanti Binti, et al. "Design and development of CNC robotic machine integrate-able with Nd-Yag laser device." *Procedia engineering* 184 (2017): 145-155. | MACH 3, KCAM, CAD | Positioning and coordination in laser cutting application |

| | | | |
|---|---|---|---|
| | | | |
| 4 | Girhe, Puja, Shubham Yenkar, and Arpita Chirde. "Arduino based cost effective CNC plotter machine." International Journal of Emerging Technologies in Engineering Research (IJETER) 6.2 (2018): 6-9. | MACH 3 CNC Controller | The major factor of error was the raggedness of the driving system with unstable values. |
| 5 | RAIHAN, MD SHAIKAT. "PROTOTYPING OF ARDUINO BASED ROUTER (3AXIS) FOR WOOD WORKS." (2018). | GRBL Control, Arduino IDE, Inkscape | Designed a low cost mini CNC Router machine, which is easily control with computer and suddenly stop and paused by click action on computer |
| 6 | Ahmed, B. J. S. A. A. "Design and Analysis Mini CNC Plotter Machine." (2018). | Arduino IDE, Easel | A full documentation of a CNC router |
| 7 | A. Quatrano, M. C. De Simone , Z. B. Rivera, D. Guida"Development and Implementation of a Control System for a Retrofitted CNC Machine by Using Arduino" Department of Industrial Engineering, Via Giovanni Paolo | Repetier Host, CamBam | Optimal control for retrofitted CNC machine by using arduino |

| | | | |
|---|---|---|---|
| | II, 84135 Fisciano (SA), Italy | | |
| 8 | Flavio Maldonado Bentes, Marcelo de Jesus Rodrigues Nóbrega, F. B. D. S. Martins, Hildson Queiroz "CNC Machine Building Through Open Sources Projects and Programs", Rio de Janeiro, Brazil | Universal CNC code sender, GRBL 0.9J firmware, arduino IDE | Low cost, open source CNC machine with ability to work in three dimensional space |

# CHAPTER 3

## Research Methodology

## 3.1 System Architecture

This chapter of thesis presents the architecture of the proposed system. The system proposed mainly comprises of three blocks listed below:

- Mechanical structure
- Electrical modules
- CAD/CAM software

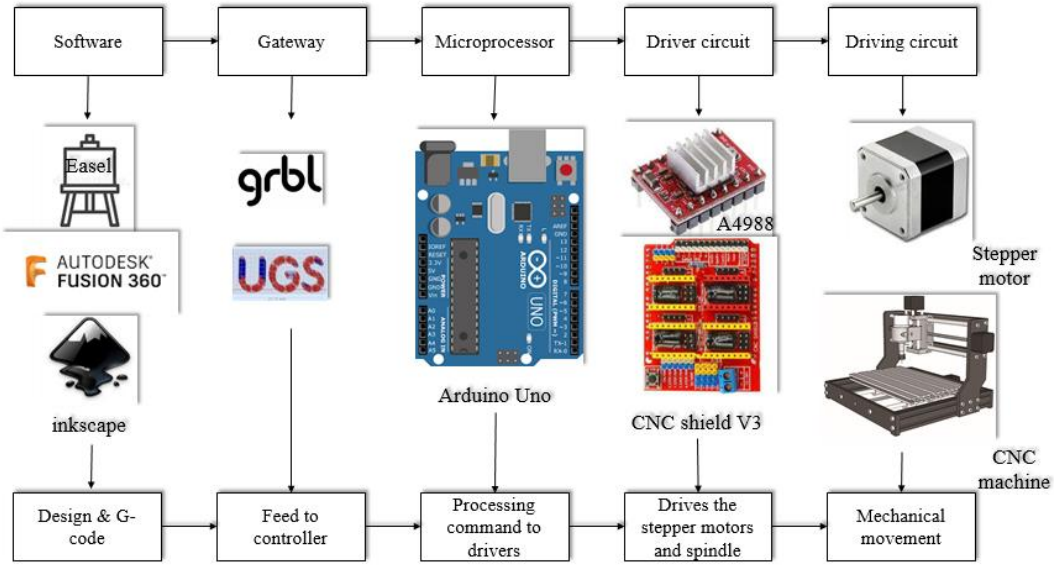


*Figure 4: Proposed architecture*

The above architecture is generalized as follows

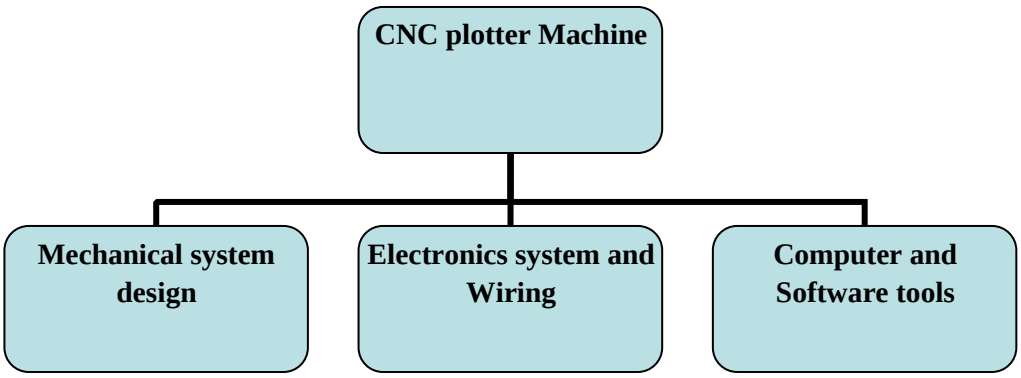


*Figure 5: Generalized form of proposed architecture*

## 3.2 Computer and software tools

### 3.2.1 Arduino IDE

The Arduino IDE is an open-source software, which is used to write and upload code to the Arduino boards. The Arduino integrated development environment (IDE) is a cross-platform application (for Microsoft Windows, macOS, and Linux) that is written in the Java programming language. The IDE is a development environment that combines a text editor and access to the compiler, linker, and uploader in an easy-to-use method. The language used to program the Arduino is C++.

### 3.2.2 GRBL Firmware

GRBL is one of the most popular CNC controller firmware out there. GRBL combined with a CNC controller is critical for proper functioning of CNC machine. GRBL has one main advantage that it eliminates the need for a parallel port on computer. GRBL passes lines of code via USB. GRBL controls stepper motors and spindles/lasers.
GRBL uses G-Code as input and outputs signals via the Arduino pins.

### 3.2.3 CAD/CAM software:

There are many CAD/CAM software namely Repetier Host, CamBam, Inkscape, Easel, Fusion 360, KCAM and Aspire are few of them.
The software we are using is Aspire because of its easy-to-use nature and quick response. We also tried other available software like Fusion 360 but it was slow on launching and very slow when it was given the job of CAM (computer aided manufacturing).
Aspire served as both CAD and CAM. It is used for designing 2D and 3D models and objects. It is called computer aided design. And it also has the ability to convert that design into manufacturing program readable for CNC machine. It is called computer aided manufacturing.

### 3.2.4 Gateway

This term is used for software like GRBL controller and UGS (universal G-Code sender). As these software do not have ability to work as CAM/CAD, they are only used as a gateway between CAM and CNC controller.

Grbl Controller is designed to send G-Code to CNC and 3D milling machines. It isn't super smart, it just needs to give the user a nice way to get commands down to whatever controller they are using.

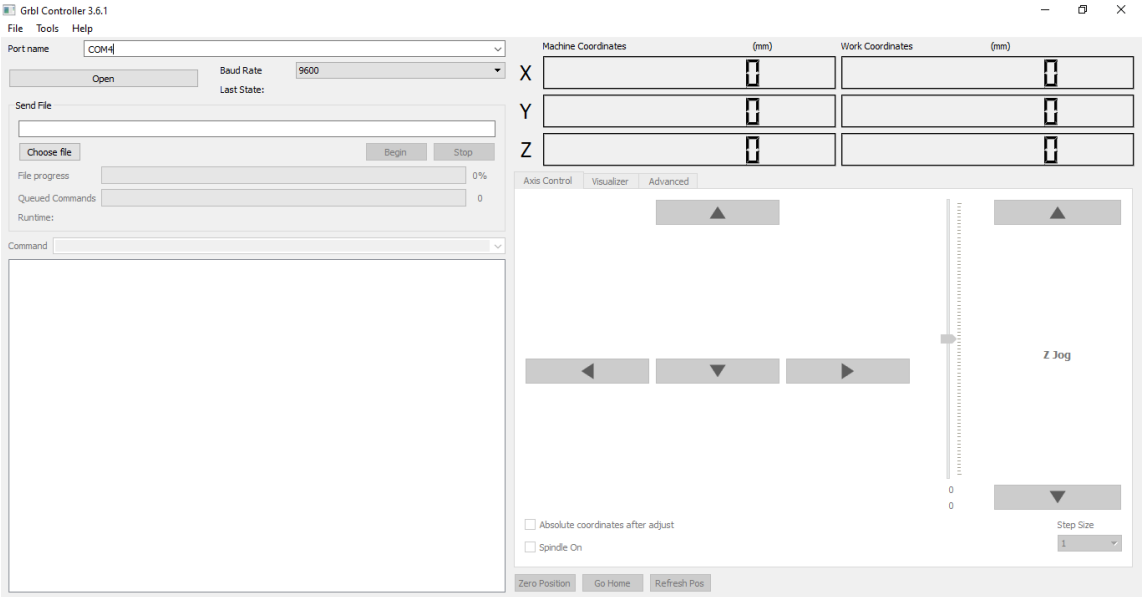


*Figure 6: GRBL Controller 3.6.1 User Interface*

## 3.3 Electrical system and wiring

This section will discuss the electronic parts and wiring which is needed for designing and building our CNC plotter machine. So, the main electronic component required are one Arduino UNO R3, one CNC V3 Shield with A4988 Driver Module with Heatsink for Arduino, stepper motors, D.C. power supply, pen holder, some wires and USB to serial adapter.

### 3.3.1 Arduino Uno

Arduino Uno is microcontroller based on ATmega328P Atmel AVR family microcontroller (MCU). It is an open source software and hardware design and manufacture a single of microcontroller.

- It has 14 digital Input/output pins
- Analogue input can be sampled using on-chip ADC
- It also has 6 PWM outputs multiplexed on to the digital IO pins.
- The dimensions of Arduino Uno measured are [68.6 mm x 53.4 mm].

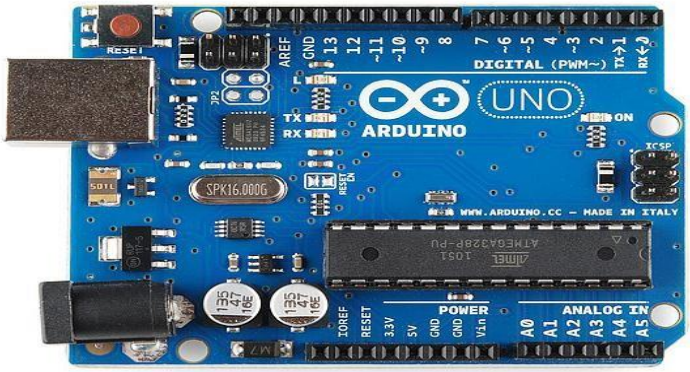


*Figure 7: Arduino UNO R3 Board*

### 3.3.2 Driver circuit

A4988 stepper Driver Module is used along with the Heatsink connected to CNC shield V3. Both the stepper driver module and CNC shield are explained in next chapter.

### 3.3.3 Circuit and Wiring

The wiring of the various components of electronics system is represented in the Fig., shown below. The microcontroller of Arduino board is connected to the computer system through the USB serial port. The Stepper Motors of three axes (X, Y and Z) are connected with CNC shield driver board. D.C. Power supply is provided for all the components of electrical circuit.

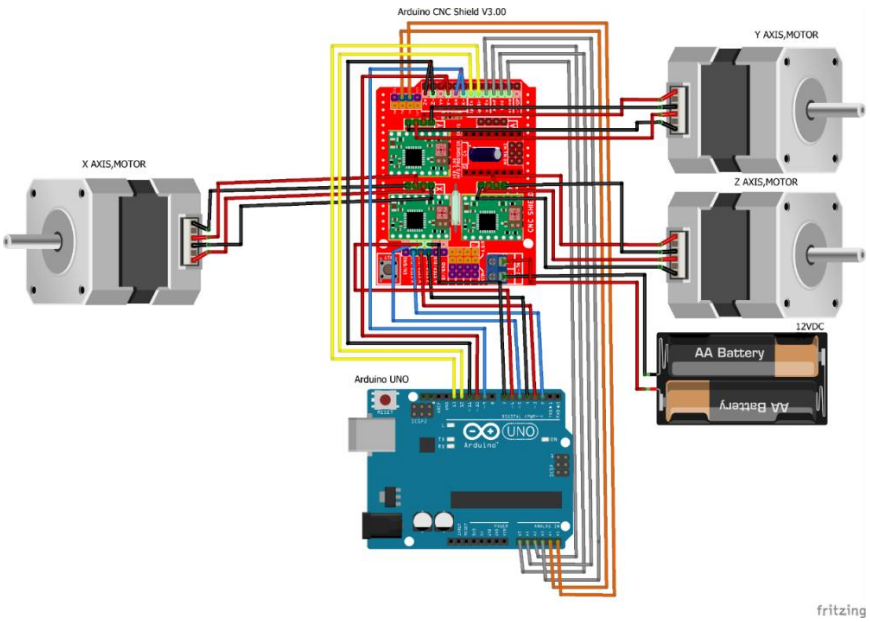


*Figure 8: Electrical Circuit*

### 3.3.4 Driving circuit

It includes the spindle motor connected to support of z-axis, three stepper motors and the mechanical structure which provide the mechanical support to the stepper motors to move in 3-dimensional space.

## 3.4 Mechanical system design

In this section of project covers the mechanical structure of CNC machine. As our main concern is electrical and software part, the mechanical structure is not actually designed but ordered as suggested by panel.

Linear movement of steppers motors that controls X, Y and Z axes is called Length of travel. The length travel of CNC plotter machine that decided as 300 mm for X axis, 180 mm for Y axis and 45 mm up-down for Z axis.

- The left-right motion is controlled by X axis stepper motor
- Front-back motion controlled by Y axis stepper motor
- Drill bit goes up and down by Z axis stepper motor controller

*Table 3: Specifications of Mechanical structure*

| | |
|---|---|
| Structure dimensions | 360 x 330 x 220(mm) |
| Working bed dimensions | 300 x 180 x 45(mm) |
| Material dimensions | X: 300mm, Y: 180mm, Z: 30mm or less |
| Feed rate | 1000 – 2000 mm/min |
| Angle rotation | 0 - 360º |
| Time of simulate | Depends on feed rate and type of processed material |
| Drilling Bit | 0.1mm |

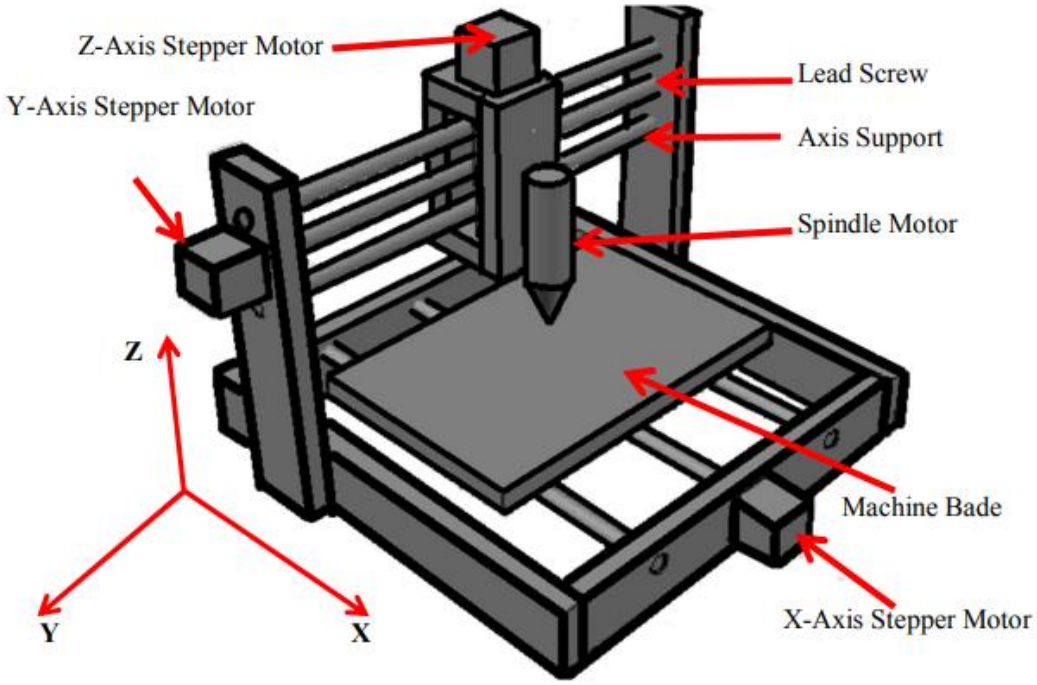


*Figure 9: Model of mechanical framework*

# CHAPTER 4

Hardware tools

## 4.1 Hardware tools

The Hardware components and tools used in the proposed system are stated below:

- A4988 stepper Driver Module
- CNC shield V3
- NEMA 17 stepper motors

### 4.1.1 A4988 stepper motor Driver

The A4988 is a micro-stepping driver for controlling bipolar stepper motors which has built-in translator for easy operation. This means that we can control the stepper motor with just 2 pins from our controller, or one for controlling the rotation direction and the other for controlling the steps.

The Driver provides five different step resolutions: full-step, haft-step, quarter-step, eight-step and sixteenth-step. Also, it has a potentiometer for adjusting the current output, over-temperature thermal shutdown and crossover-current protection.

Its logic voltage is from 3 to 5.5 V and the maximum current per phase is 2A if good addition cooling is provided or 1A continuous current per phase without heat sink or cooling.

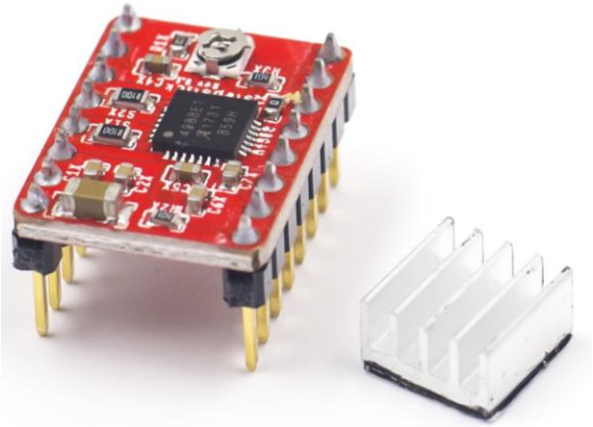

*Figure 10: A4988 stepper motor module with heat sink*

### 4.1.2 A4988 Stepper Driver Pinout

Here we will discuss the pinout of the A4988 driver and its connection with the stepper motor and the controller.

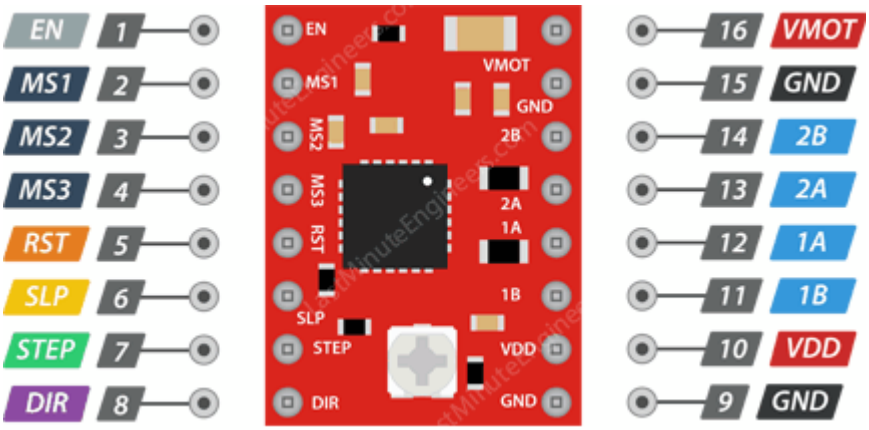


*Figure 11: A4988 Driver module Pinout*

Starting from the 2 pins on the button right side, which are used for powering the driver, the VDD and Ground pins that are connected to a power supply of 3 to 5.5 V. The Arduino Board provides 5 V.

Next 4 pins above VDD and Ground are for connecting the stepper motor. The 1A and 1B pins are connected to one coil of the motor and the 2A and 2B pins to the other coil of the motor.

Next 2 pins are used for powering the stepper motor, Ground and VMOT are connected to Power Supply from 8 to 35 V. A decoupling capacitor of at least 47 µF is used for protecting the driver board from voltage spikes.

The next two 2 pins, Step and Direction are the pins that are actually used for controlling the motor movements. The Direction connected to one of the digital pins on microcontroller controls the rotation direction of the motor. Step pin controls the mirosteps of the motor and with each pulse sent to this pin the motor moves one step. So there is no need of complex programming, phase sequence tables and frequency control lines, because the built-in translator of the A4988 Driver.

Next is the SLEEP Pin, used for minimizing power consumption when the motor is not in use. A logic low puts the board in sleep mode.

Next, the RESET pin sets the translator to a predefined Home state.

*Table 4: Stepper Motor Resolution truth table*

| MS1 | MS2 | MS3 | Resolution |
|---|---|---|---|
| 0 | 0 | 0 | Full step |
| 1 | 0 | 0 | Half step |
| 0 | 1 | 0 | Quarter step |
| 1 | 1 | 0 | Eighth step |
| 1 | 1 | 1 | Sixteenth step |

The next 3 pins (MS1, MS2 and MS3) are for selecting one of the five step resolutions according to the above truth table. Leaving them disconnected results in board operating in full step mode.

The last one, the ENABLE used for enabling or disabling the output. So, a logic high will keep the outputs disabled.

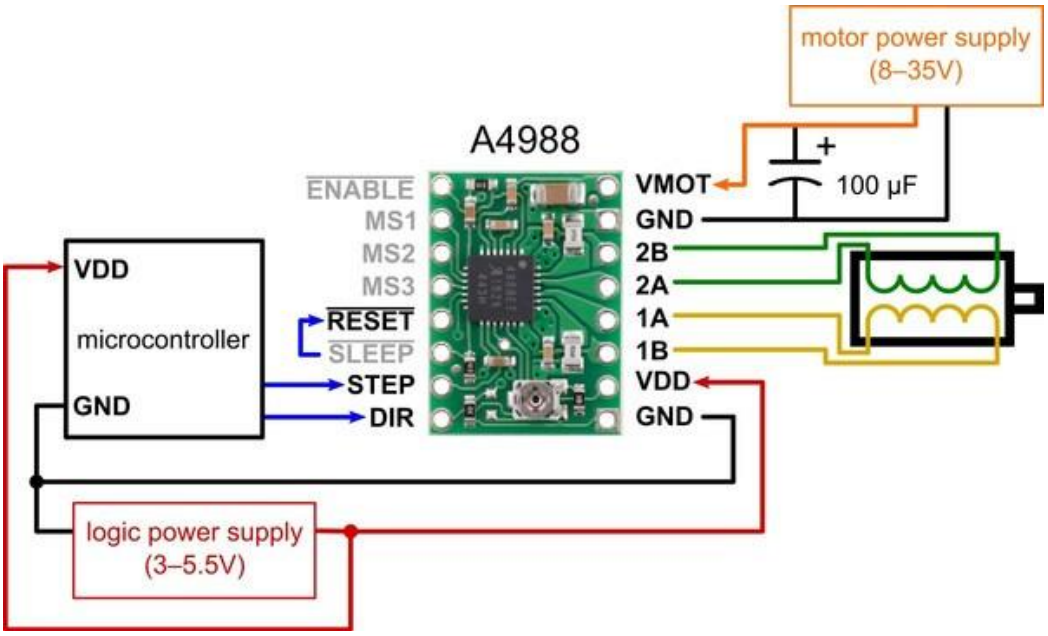


*Figure 12: A4988 connections*

### 4.1.3 CNC Shield V3

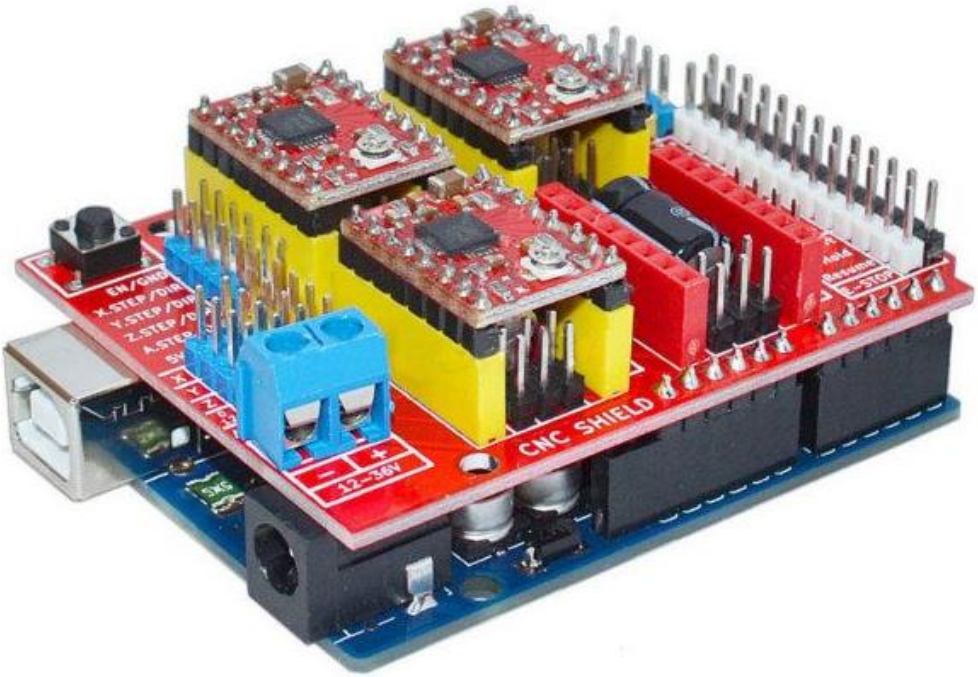


*Figure 13: CNC Shield V3 mounted on Arduino UNO*

The CNC Shield V3.0 is used to build an engraving machine, 3D printer, mini-CNC and other similar devices using your Arduino. It is designed as a shield and can plug on top of an Arduino. It requires no external connections and wiring. It has 4 slots on the board for plugging in stepper motor driver. Controlling each step stepper motor requires only two IO pins on the Arduino, step and direction.[9]

**Features and specifications:**

| |
|---|
| The extension board can be used for Small CNC routers, Carving Machine, 3D Printers, DIY Laser Cutters, and almost any project where there is need to control a stepper motor |
| It allows us to control up to 4 stepper motors |
| It is Arduino compatible |
| Latest Arduino CNC Shield is available CNC Shield V3.10 |
| GRBL 0.9 compatible. (Open-source firmware that runs on an Arduino UNO that turns G-code commands into stepper signals) |
| Supports PWM Spindle and direction pins |
| 4-Axis support (X, Y, Z, A-Can duplicate X, Y, Z) |
| Supports Coolant enable |

| |
|---|
| Supports removable A4988 compatible stepper drivers. (A4988, DRV8825 and others) (Not Included) |
| Jumpers to set the Micro-Stepping for the stepper drivers. (Some drivers like the DRV8825 can do up to 1/32 micro-stepping) |
| Compact design. |
| Runs on 12-36V DC. (Note only DRV8825 drivers can handle up to 36V) |
| Uses removable A4988 or DRV8825 compatible stepping driver. |

### 4.1.4 NEMA 17 stepper motors

**Stepper Motor**

The digital pulse stepper can be converted into the movement of the pen with respect to the X, Y, Z axes directions. The stepper motor is a brushless motor that distributes full rotation in several equal steps.

The output rotational motion of stepper motors converted into linear motion along the X, Y and Z axis with the help of mechanical structure of the CNC machine.

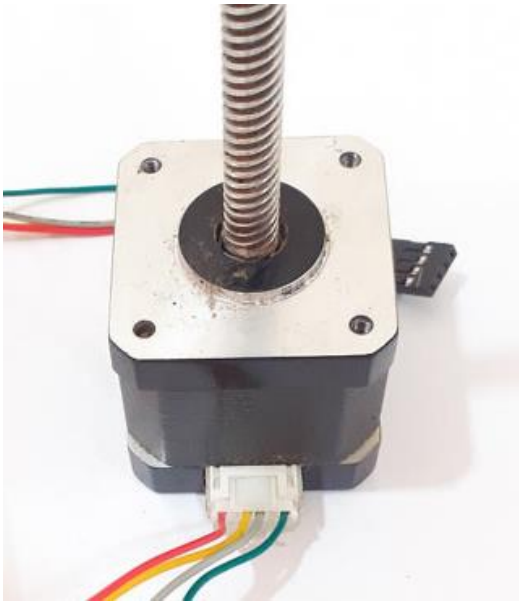

*Figure 14: NEMA 17 stepper motor*

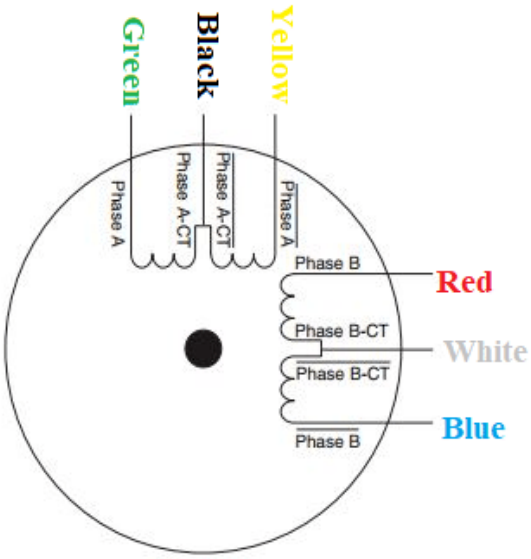


*Figure 15: NEMA 17 stepper motor phases*

**Specifications of NEMA17**

| |
|---|
| Rated Voltage: 12V DC |
| Rated current 400mA |
| Step Angle: 1.8 deg. |
| No. of Phases: 4 |
| Motor Length: 1.54 inches |
| 4-wire, 8-inch lead |
| Resistance per phase 30ohms |
| Inductance per phase 23mH |
| Weight 0.24 kg |
| 200 steps per revolution, 1.8 degrees |
| Operating Temperature: -10 to 50 °C |
| Holding Torque: 2000 g-cm |

# CHAPTER 5

## Hardware Implementation & Results

## 5.1 The Hardware

The hardware can be divided into:

- The structure
- X and Y axes
- The spindle assembly and the motor
- The Z axis

### 5.1.1 The Structure

The structure of the machine was made out of aluminum profiles. Each side was constructed from two pieces in order to minimize the size of the milled part so it can be rigid enough to provide it should provide enough strength to hold the parts without exhibiting any deformations, especially plastic deformation due to the dead weight of the spindle motor and the z axis. This weight will cause a positive stress in the outer surface of the frame, eventually causing inaccuracies in the mill. Deformations due to the force applied by the Z axis when plunging the milled part will cause a negative stress in the same surface, eventually yielding inaccuracies.

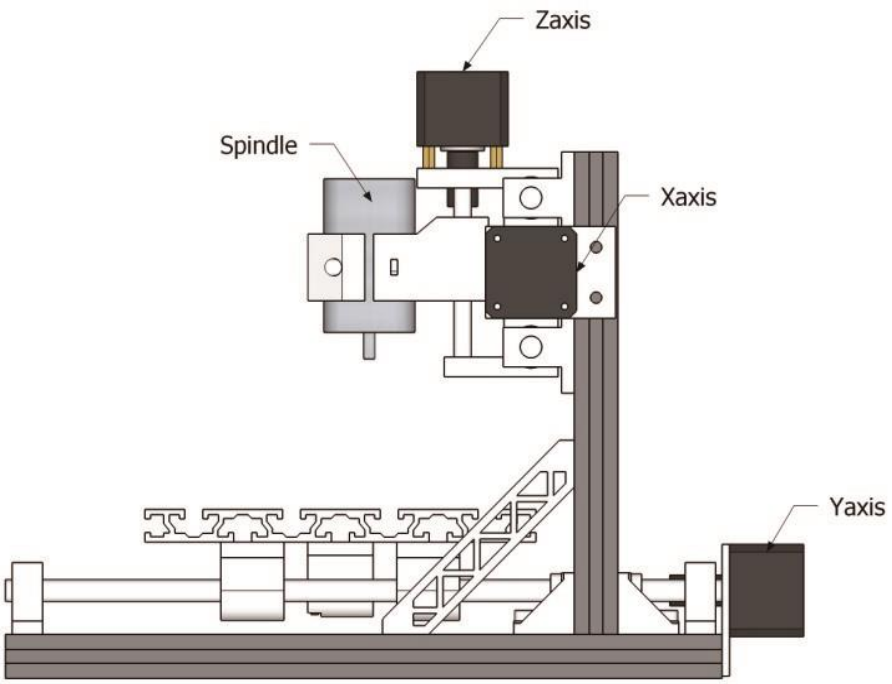


*Figure 16: Mechanical Structure model with three stepper motors for 3D movement and a spindle motor for drilling bit*

### 5.1.2 X and Y axes

The final design had a solid structure made out of Aluminum profile with the Y-axis structure on top of the movable X-axis. Both ends of the screw rods were equipped with stepper motors. Each motor had a specification of 12V voltage and about 1.6A of current. After doing some adjustments, the length of the X-axis rod is 305mm and that of the Y-axis screw rod is 185mm. The print platform 300 mm across X-axis and 180mm across Y-axis.

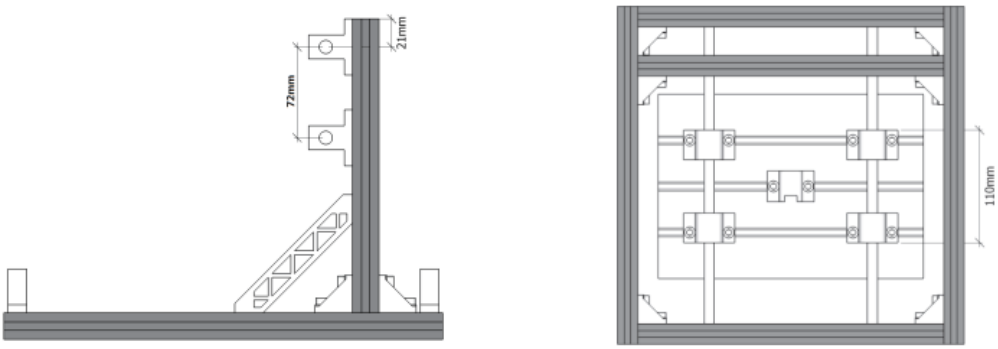


*Figure 17: X and Y axis supports for stepper motors along with rod rails*

### 5.1.3 The spindle assembly and Motor

The spindle assembly is a 3-d printed shroud to hold the spindle motor and still be able to move it using the screw rod using stepper motor. The spindle motor is a 12V DC motor with 1200rpm and torque of 12.6in-lb.

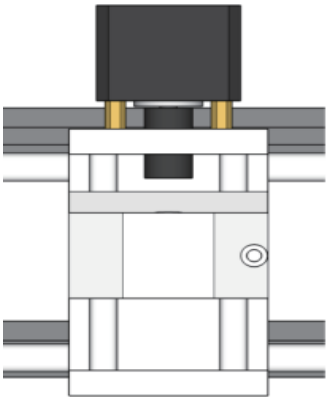

*Figure 18: spindle motor assembly*

### 5.1.4 Z-axis

The spindle assembly also houses the Z axis driven by same stepper motor as X and Y axis. The Z axis has 45mm travel, which there for just picking and placing the spindle

for a true 2D drawing (with 3D movement).

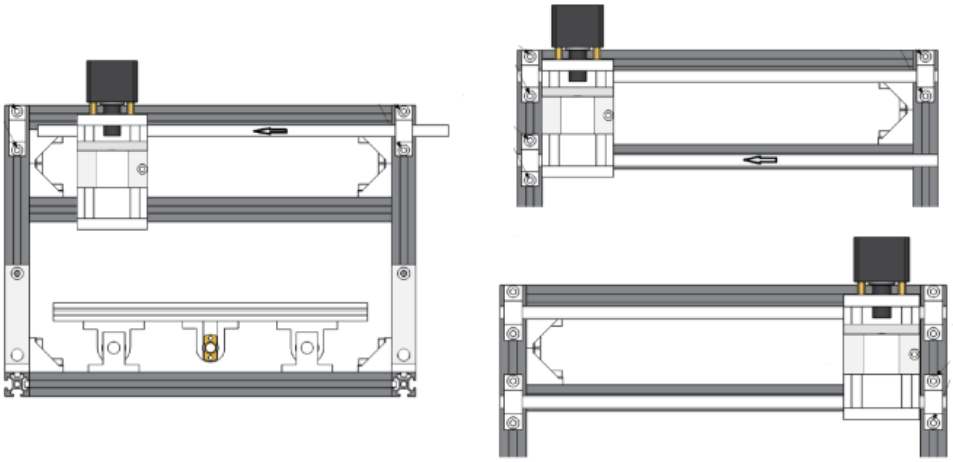

*Figure 19: Z axis support and moving rod rail*

## 5.2 Results

### 5.2.1 Mathematical Calculations

Stepper motor 1 Revolution = 200 steps

1 revolution=> 200 steps = 360º

1 step = 1.8º

Relationship between rotational motion of stepper motor and length of travel

1 rev = 360º =200 steps => 8mm of linear travel

1 step = 8mm/200 = 0.4mm

Each of these 200 steps can be further divided upto sixteenth step using Micro-stepping

1/16$^{th}$ step=0.04mm/16 => 0.0025mm or 2.5 µm

So, minimum distance this CNC can travel is 2.5 µm

Crucial formula to our calibration

Steps per mm=(steps per rev x microsteps)/mm per step

This gives us the steps for each axis

Steps per mm =( 200 x 1 ) / 8

Steps / mm = 25

As we are using same diameter of leadscrews and same stepper motors, x, y and z axes' steps/mm will be same i.e 25steps/mm.

### 5.2.2 CAD/CAM Results

Aspire 10 is used as computer aided design software.

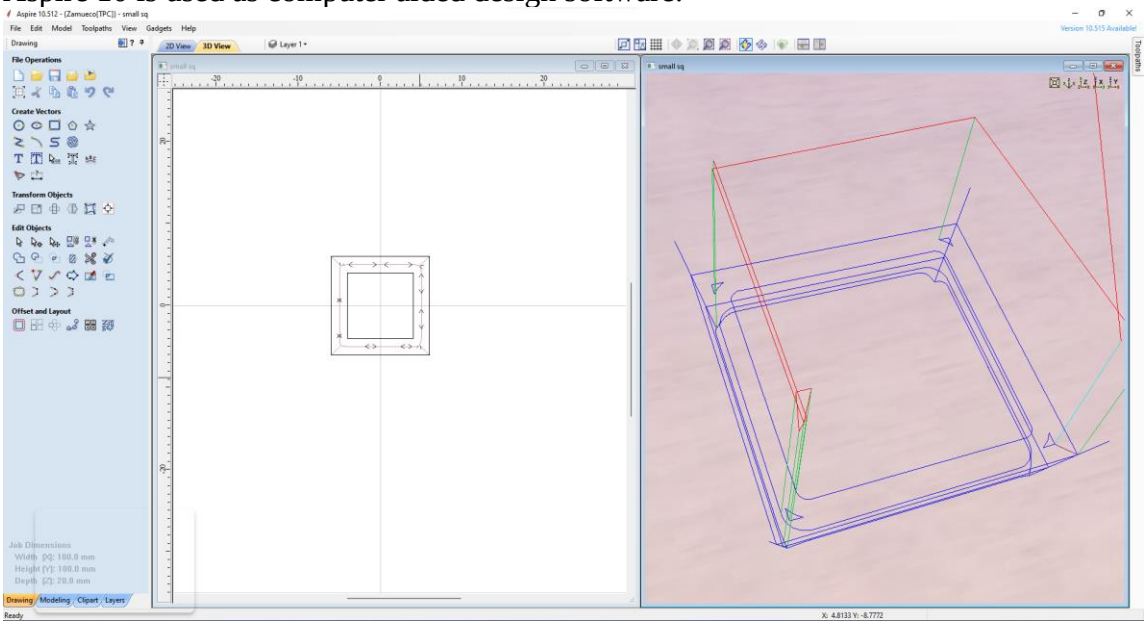

*Figure 20: Computer aided design of a simple square shape*

Aspire is also used as computer aided manufacturing as it also converts the design into G-Code. But we are using software named GRBL controller to control the GRBL Firmware

After computer aided manufacturing the code is uploaded to controller through GRBL controller in the form of .NC file.

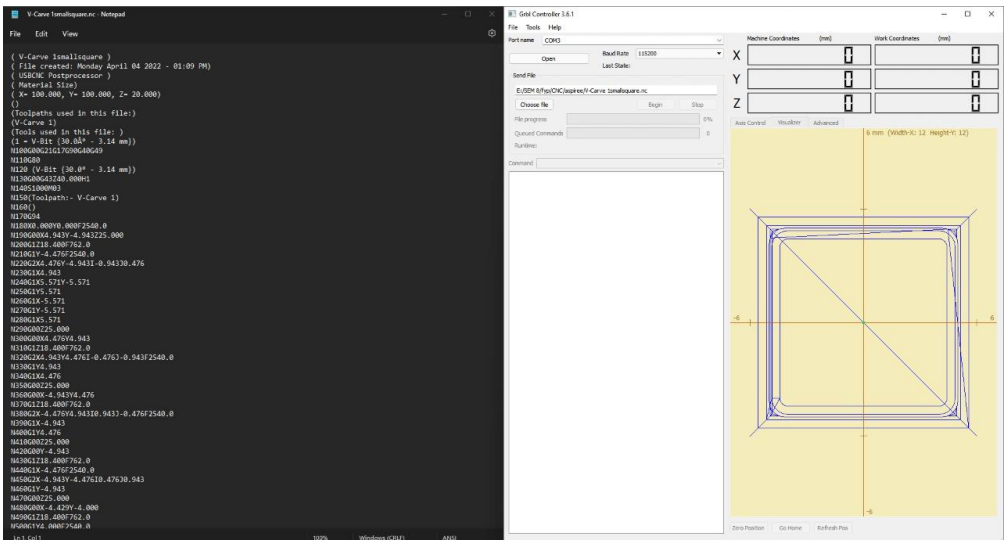

*Figure 21: GRBL Controller interface with CNC machine and real time Observations*

### 5.2.3 G-Code for 'COMSATS' in quick engrave mode

## Initial parameters

```
( Quick Engrave 1-comsats )
( File created: Friday June 10 2022 - 09:22 AM)
( USBCNC Postprocessor )
( Material Size)
( X= 180.000, Y= 180.000, Z= 18.000)
()
(Toolpaths used in this file:)
(Quick Engrave 2)
(Tools used in this file: )
(1 = V-Bit {30.0Â° - 3.14 mm})
```

## Starting

```
N100 G00 G21 G17 G90 G40 G49
N110 G80
N120 (V-Bit {30.0° - 3.14 mm})
N130 G00 G43 Z20.000H1
N140 S1000 M03
N150 (Toolpath:- Quick Engrave 2)
N160 ()
N170 G94
N180 X0.000Y0.000 F2540.0
N190 G00 X8.952 Y8.487 Z5.000
N200 G1 Z-1.000 F762.0
N210 G1 X8.433 Y9.078 F2540.0
N220 G1 X7.939 Y9.709
N230 G1 X7.590 Y10.199
N240 G1 X7.265 Y10.699
```

In between start and end, there is a long code of repeated instructions like **N15020 G1 X137.227 Y5.318**

N is simply line or block number while the remaining line means linear motion from previous position to **X137.227 Y5.318**

## Ending

```
N15020 G1 X137.227 Y5.318
N15030 G1 X137.130 Y5.259
N15040 G1 X137.040 Y5.183
N15050 G1 X136.956 Y5.089
N15060 G1 X136.807 Y4.852
N15070 G1 X136.119
N15080 G1 Y11.668
N15090 G00 Z5.000
N15100 G00 Z20.000
N15110 G00 X0.000Y0.000
N15120 M09
N15130 M30
%
```

### 5.2.4 Arduino Code for 15x15 mm square

```
const int stepXPIN = 3;
const int dirXPIN = 4;
 const int stepYPIN = 5;
const int dirYPIN = 6;
void setup() {
  pinMode(stepXPIN,OUTPUT);
  pinMode(dirXPIN,OUTPUT);
  pinMode(stepYPIN,OUTPUT);
  pinMode(dirYPIN,OUTPUT);
}
void loop() {
  digitalWrite(dirXPIN,HIGH);
  for(int x = 0; x < 375; x++) {
    digitalWrite(stepXPIN,HIGH);
    delayMicroseconds(500);
    digitalWrite(stepXPIN,LOW);
    delayMicroseconds(500);
  }
delay(1000);
  digitalWrite(dirYPIN,HIGH);
  for(int x = 0; x < 375; x++) {
    digitalWrite(stepYPIN,HIGH);
    delayMicroseconds(500);
    digitalWrite(stepYPIN,LOW);
    delayMicroseconds(500);
  }
delay(1000);
  digitalWrite(dirXPIN,LOW);
  for(int x = 0; x < 375; x++) {
    digitalWrite(stepXPIN,HIGH);
    delayMicroseconds(500);
    digitalWrite(stepXPIN,LOW);
    delayMicroseconds(500);
  }
delay(1000);
  digitalWrite(dirYPIN,LOW);
  for(int x = 0; x < 375; x++) {
    digitalWrite(stepYPIN,HIGH);
    delayMicroseconds(500);
    digitalWrite(stepYPIN,LOW);
    delayMicroseconds(500);
  }
delay(1000);
}
```

### 5.2.5 Output Workpiece

As of now we are able to cut 2-d shapes, having motor to move in sync with one another makes it look seem less

*Figure 22: First result for making an Arc*

*Figure 23: Engraving results of China Wood (linear motion in XY plane) without G-Code using C++ coding and using loops Note: number of loops required for desired length is calculated mathematically*

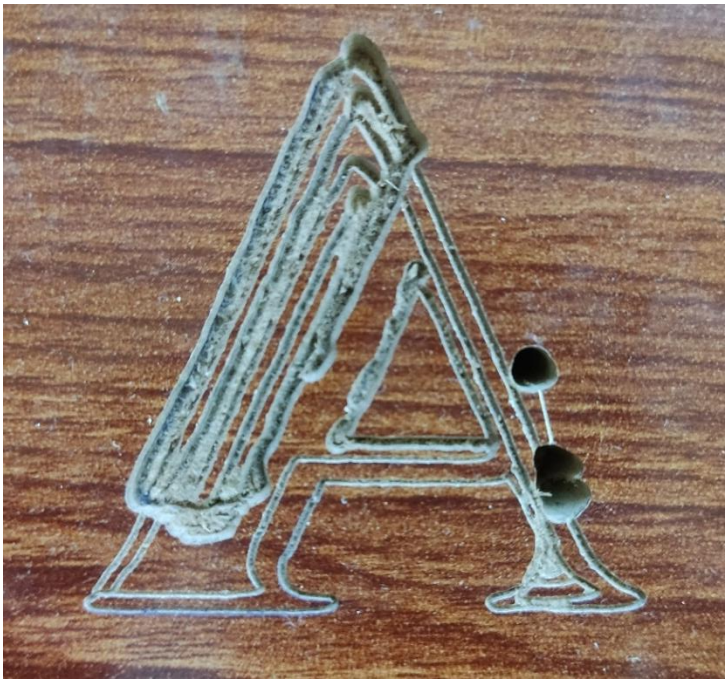

*Figure 24: Alphabet 'A' written in engraving mode (G-Code)*

*Figure 25: Word 'COMSATS' written in fast engraving mode (G-Code)*

### 5.2.6 CNC Machine

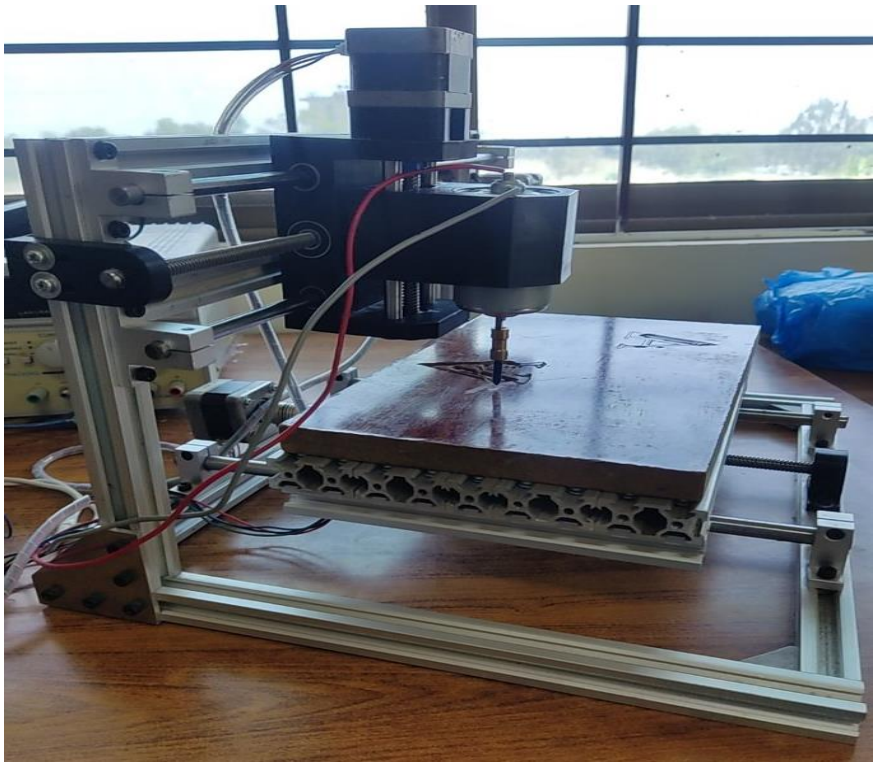

*Figure 26: Final form of CNC machine*

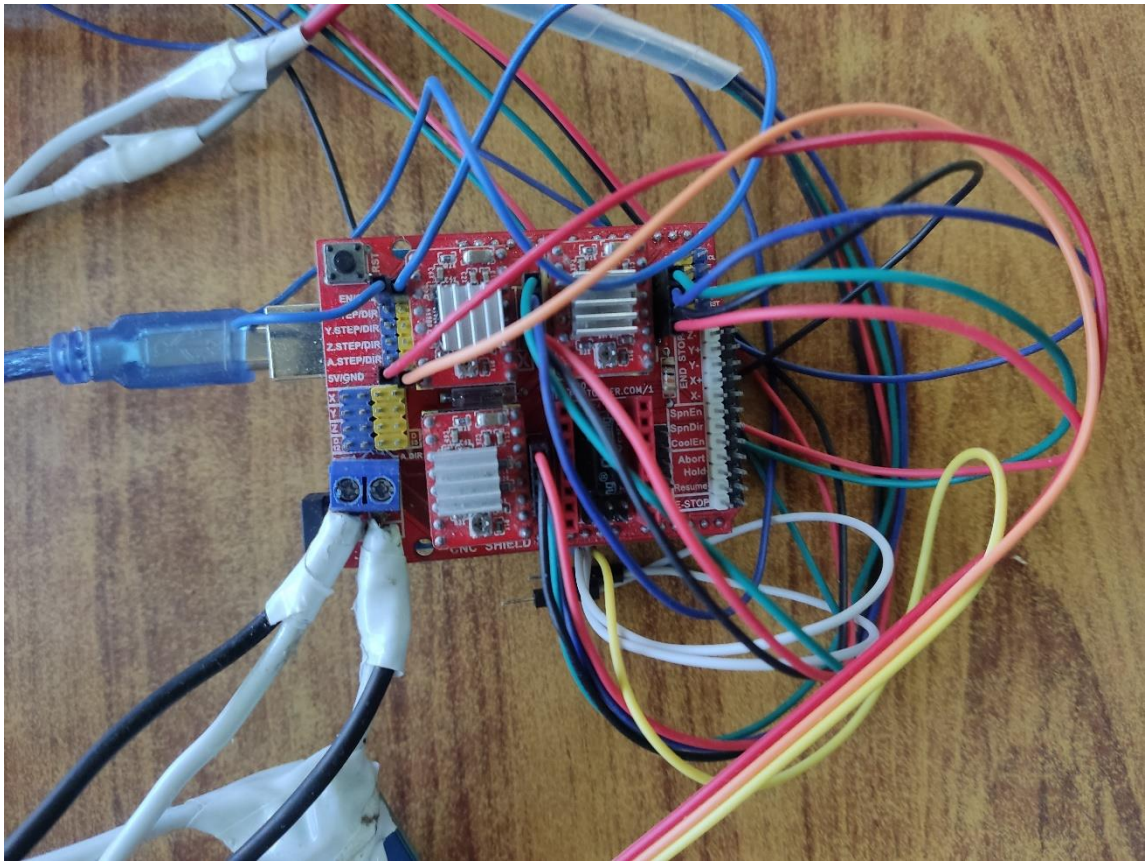


*Figure 27: Circuit with Arduino UNO and CNC shield mounted on it. A4988 motor driver, used for stepper motors*

# CHAPTER 6

## Conclusions & Discussions

## 6.1 Conclusions

The project " Computer Numerical Control (CNC) based Two-Dimensional Cutter " is proposed to find a solution that automates such widely required tasks as it has several advantages like time saving, cost reduction etc. This project aims at development of a CNC machine such that it is able to work on a two-dimensional work bed along with the ability of cutting and possibly plotting applications. The proposed system uses three stepper motors to move a spindle motor to cut and engrave in given material. Graphic or design is developed in any 2-d or 3-d design software, converted to g-code and handed over to GRBL- controller. With the help of the coordinates, direction and feed rate, the spindle moves in the given 3-d space and engraves/cuts the provided material.

## 6.2 Limitations

The proposed system is the effective and efficient replacement to the conventional CNC system but still it has some limitations which are stated as follows:

- The material has to be soft enough to be cut under 1200rpm spindle
- In order to get more harder or denser material to be cut, upgrading spindle to a higher rpm spindle is an option
- The given material can’t be bigger then the bed dimensions (300mm x 180mm x 45mm).

## 6.3 Future Recommendations

The proposed system offers an advanced and improved CNC based Cutting system. In future following advancements can also be made:

- The system is only cutting and engraving, in future it can be adopted into PCB dry etching, various varieties of CNC machines.
- Upgrading spindle can result in more variety of material to be cut and increasing bed size to accommodate bigger projects.

## 6.4 Bibliography

[1*] Intarapadung, Anantakul. "* (Development of Mini CNC Machine Design and Building for Making Ceramic Cup and Bowl Prototype)*." Pertanika Journal of Science & Technology 29.3 (2021).*

*[2] Sara Raad Qasim,Haider Mohammad,Mustafa Falah,(2019), Accurate and Cost-Effective Mini CNC Plotter, nternational Journal of Computer Applications (0975 – 8887) Volume 178 – No. 48, September 2019.*

*[3] Nur Hidayanti Binti Ambrizala, Awais Farooqib, Osama I. Alsultanc, Nukman Bin Yusoffd,(2017), Design and Development of CNC Robotic Machine Integrate-able with Nd-Yag Laser Device, Procedia Engineering 184 (2017) 145 – 155.*

*[4] Girhe, Puja, Shubham Yenkar, and Arpita Chirde. "Arduino based cost effective CNC plotter machine." International Journal of Emerging Technologies in Engineering Research (IJETER) 6.2 (2018): 6-9*

*[5] Raihan, Md Shaikat. "Prototyping Of Arduino Based Router (3axis) For Wood Works." (2018).*

*[6] Ahmed, B. J. S. A. A. "Design and Analysis Mini CNC Plotter Machine." (2018).*

*[7] A. Quatrano, M. C. De Simone , Z. B. Rivera, D. Guida"Development and Implementation of a Control System for a Retrofitted CNC Machine by Using Arduino" Department of Industrial Engineering, Via Giovanni Paolo II, 84135 Fisciano (SA), Italy*

*[8]Flavio Maldonado Bentes, Marcelo de Jesus Rodrigues Nóbrega, F. B. D. S. Martins, Hildson Queiroz "CNC Machine Building Through Open Sources Projects and Programs", Rio de Janeiro, Brazil*

*[9]* Martin, Blazhevska, V., & dpicampaigns. (2020, August 11). *Infrastructure and Industrialization*. United Nations Sustainable Development; www.un.org. https://www.un.org/sustainabledevelopment/infrastructure-industrialization/

*[10] CNC Shield V3 - Engraving Machine 3D Printer Expansion Board buy online at Low Price in India - ElectronicsComp.com. (n.d.). CNC Shield V3 - Engraving Machine 3D Printer Expansion Board Buy Online at Low Price in India - ElectronicsComp.Com; www.electronicscomp.com. Retrieved June 14, 2022, from https://www.electronicscomp.com/cnc-shield-v3-3d-printer-a4988-expansion-board*

*[11] How to Setup GRBL & Control CNC Machine with Arduino. (2020, February 27). How To Mechatronics; howtomechatronics.com. https://howtomechatronics.com/tutorials/how-to-setup-grbl-control-cnc-machine-with-arduino/*

*[12] OSOYOO Basic board + CNC Shield V3.0+A4988 Installation Guide « osoyoo.com. (2017, April 7). OSOYOO Basic Board + CNC Shield V3.0+A4988 Installation Guide « Osoyoo.Com; osoyoo.com. https://osoyoo.com/2017/04/07/arduino-uno-cnc-shield-v3-0-a4988/*

*[13] Fahad, E. (2020, April 6). Arduino CNC Shield V3.0 and A4988 Hybrid Stepper Motor Driver Joystick. Electronic Clinic; www.electroniclinic.com. https://www.electroniclinic.com/arduino-cnc-shield-v3-0-and-a4988-hybrid-stepper-motor-driver-joystick*

*[14] What Industries Use CNC Machinery? - CNC Industries | American Micro*. (2022, February 2). AmericanMicroIndustries; www.americanmicroinc.com. https://www.americanmicroinc.com/resources/industries-use-cnc-machinery/